LDS SERIES

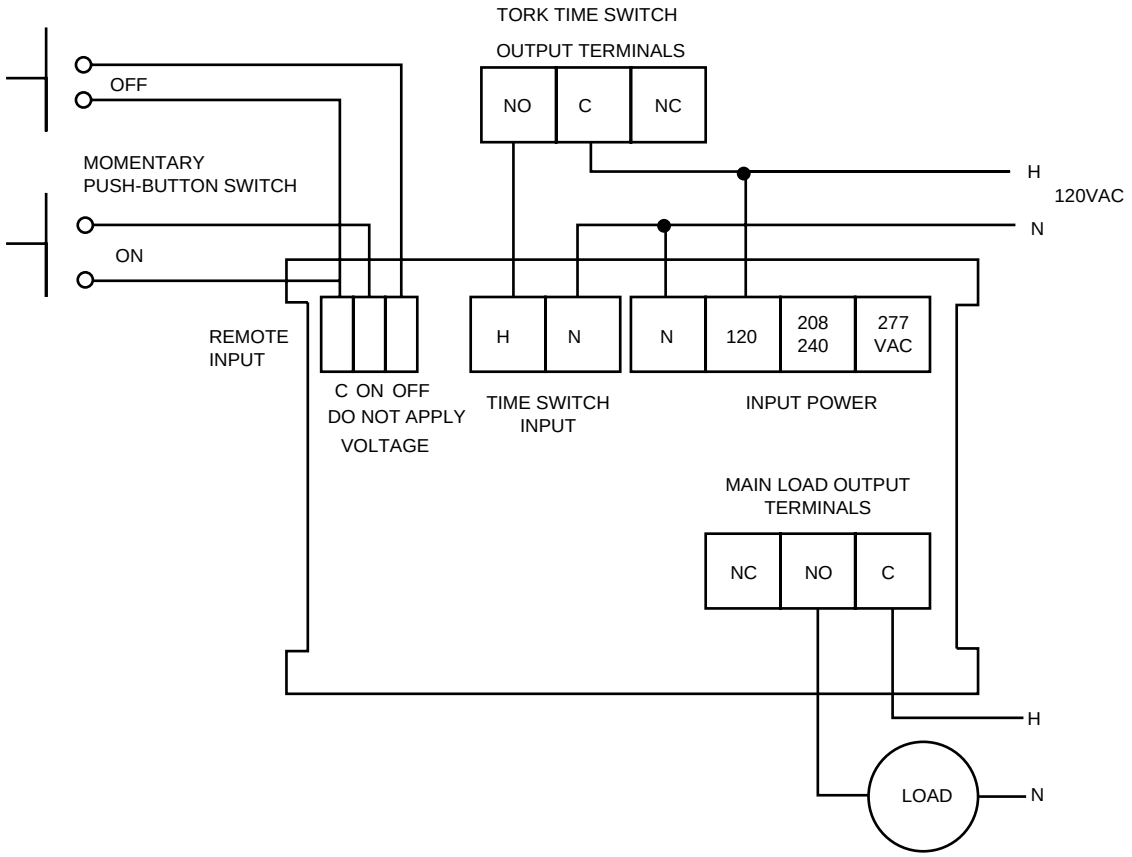
TORK TIME SWITCH
OUTPUT TERMINALS
NO
C
NC
OFF
MOMENTARY
PUSH-BUTTON SWITCH
ON
H
120VAC
N
REMOTE
INPUT
H
N
N
120
208
240
277
VAC
C ON OFF
DO NOT APPLY
VOLTAGE
TIME SWITCH
INPUT
INPUT POWER
MAIN LOAD OUTPUT
TERMINALS
NC
NO
C
H
LOAD
N

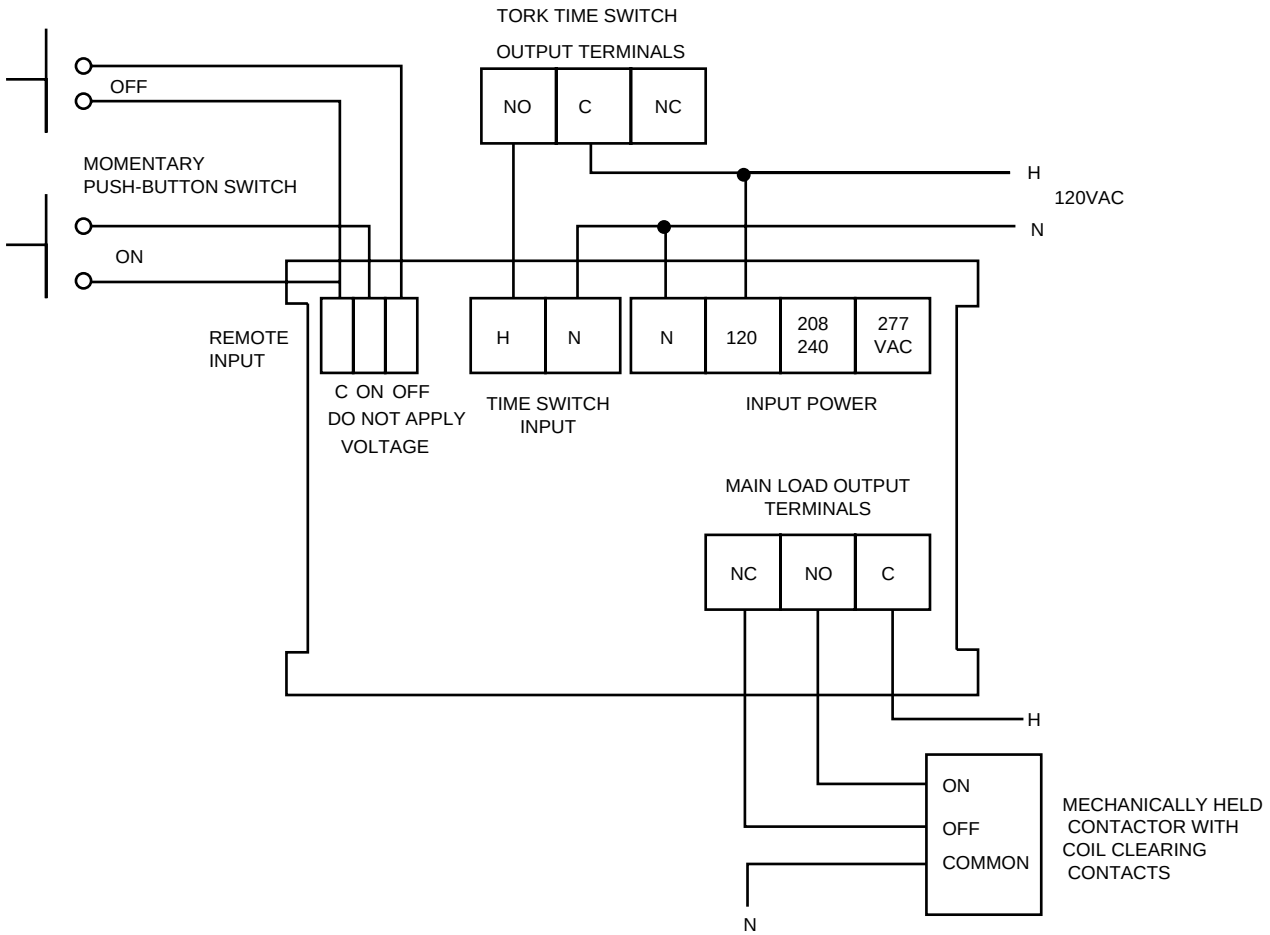
TORK TIME SWITCH
OUTPUT TERMINALS
NO
C
NC
OFF
MOMENTARY
PUSH-BUTTON SWITCH
ON
H
120VAC
N
REMOTE
INPUT
H
N
N
120
208
240
277
VAC
C ON OFF
DO NOT APPLY
VOLTAGE
TIME SWITCH
INPUT
INPUT POWER
MAIN LOAD OUTPUT
TERMINALS
NC
NO
C
H
ON
OFF
COMMON
MECHANICALLY HELD
CONTACTOR WITH
COIL CLEARING
CONTACTS
N