DGM100

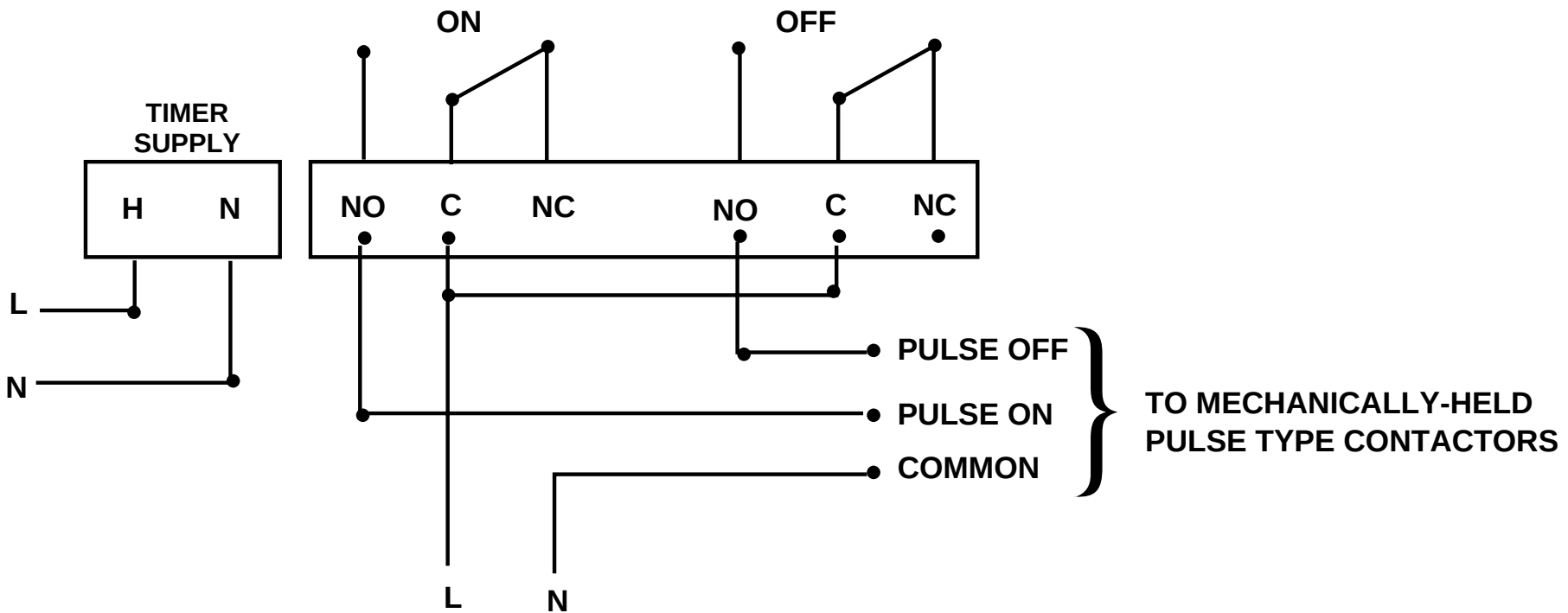
ON
OFF
TIMER SUPPLY
H
N
NO
C
NC
NO
C
NC
L
N
PULSE OFF
PULSE ON
COMMON
TO MECHANICALLY-HELD PULSE TYPE CONTACTORS
L
N