NSi
LIGHTING PRODUCTS

REFERENCE:

BKM70Q

MH Ballast Kit

BALLAST TYPE	METAL HALIDE
LAMP	70W M98
CIRCUIT TYPE	HX-HPF
INPUT FREQ.	60Hz

SPECIFICATIONS

INPUT VOLTAGE		120	208	240	277
OPERATING CURRENT		1.9	1.0	0.9	0.8
OPEN CIRCUIT CURRENT		2.3	1.25	1.1	1.0
STARTING CURRENT		1.3	1.28	1.28	1.28
CCF (*ANSI ≤ 1.8)		1.8	1.8	1.8	1.8
SHORT CIRCUIT CURRENT	SECONDARY	1.28	1.28	1.28	1.28
	INPUT	0.8	0.5	0.5	0.45
RECOMMENDED FUSE		4	3	2	2
INPUT VOLTAGE AT LAMP DROPOUT					
UL 1029 BENCH TOP RISE		A	A	A	A
OCV (Min.)		230			
INPUT POWER		90W			
POWER FACTOR		≥90%			
REGULATION	LINE VOLTS	±5%			
	LAMP WATTS	±10%			
INSULATION SYSTEM		CLASS H, 180°C			
BALLAST DIMENSION	A	1.5″			
	B	2.92″			
BALLAST NET WEIGHT		5.3 LBS			
COIL MATERIAL (Pri./Sec.)		Al/Al			
LEADS		12″ CROSS LINK POLYOLEFIN			

CAPACITOR (REQUIRED)		
CAPACITANCE		8uF±3%
MINIMUM VOLTS		280V
DRY	DIAMETER	1.37″
	HEIGHT	2.37″
CASE MAX. TEMPERATURE		100°C

IGNITOR (REQUIRED)	
IGNITOR MODEL	IGN-02
PULSE HEIGHT (kV)	3.0~4.0
Pulse Width (≥ u S)	1.0 @ 2.7

MIN. STARTING TEMP	-20°F / -30°C

WIRING DIAGRAM

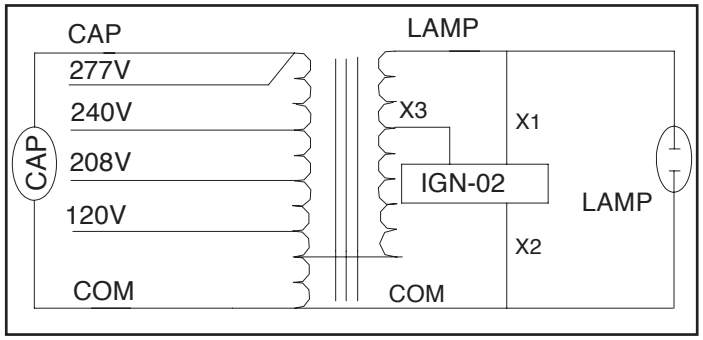

DIMENSIONS

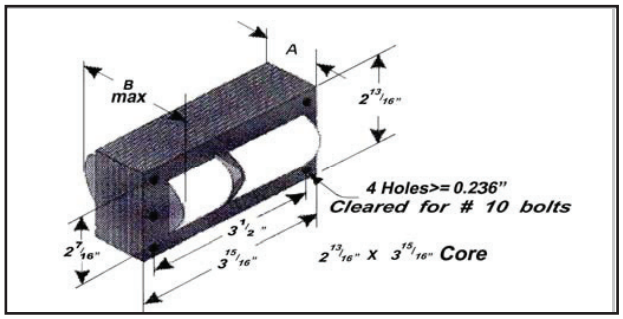

BALLAST

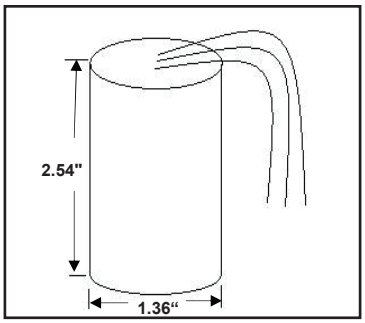

IGNITOR

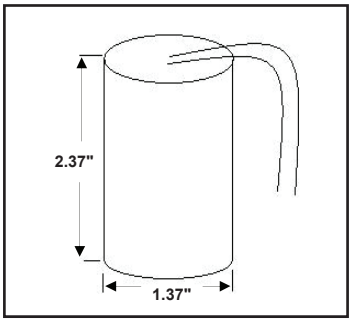

CAPACITOR

The compliance of our products to individual project specifications and approval for their use, is not warranted by NSi Lighting Products. Specification sheets and photometric data are provided as a guideline for applications information. Final consideration of any given application must take into consideration knowledge of the specific installation environment.

Questions call NSi Lighting Products at 1-800-321-5847